NEWHAVEN DISPLAY
INTERNATIONAL

Product Specification

NHD-1.5-240240AF-CSXP

TFT Liquid Crystal Display

NHD-	Newhaven Display
1.5-	1.5" Diagonal
240240-	240xRGBx240 Pixels
AF-	Model
C-	Built-in Controller
S-	High Brightness, White LED Backlight
X-	TFT
P-	IPS, Wide Temperature

Newhaven Display International, Inc.
2661 Galvin Court, Elgin, IL 60124 USA

Ph: 847.844.8795 | Fx: 847.844.8796
www.newhavendisplay.com

REACH Compliant

RoHS Compliant

Table of Contents

Document Revision History 2
Mechanical Drawing 3
Pin Description 4
Interface Selection 4
Wiring Diagram 5
Electrical Characteristics 6
Optical Characteristics 6
Controller Information 6
Timing Characteristics for TFT 7
Example Initialization Code 11
Quality Information 13

Additional Resources

- **Support Forum:** https://support.newhavendisplay.com/hc/en-us/community/topics
- **GitHub:** https://github.com/newhavendisplay
- **Example Code:** https://support.newhavendisplay.com/hc/en-us/categories/4409527834135-Example-Code/
- **Knowledge Center:** https://www.newhavendisplay.com/knowledge_center.html
- **Quality Center:** https://www.newhavendisplay.com/quality_center.html
- **Precautions for using LCDs/LCMs:** https://www.newhavendisplay.com/specs/precautions.pdf
- **Warranty / Terms & Conditions:** https://www.newhavendisplay.com/terms.html

Document Revision History

Revision	Date	Description	Changed By
-	05/01/2025	Initial Release	KL
1	03/11/2026	Updated Pin Description	KL

Mechanical Drawing

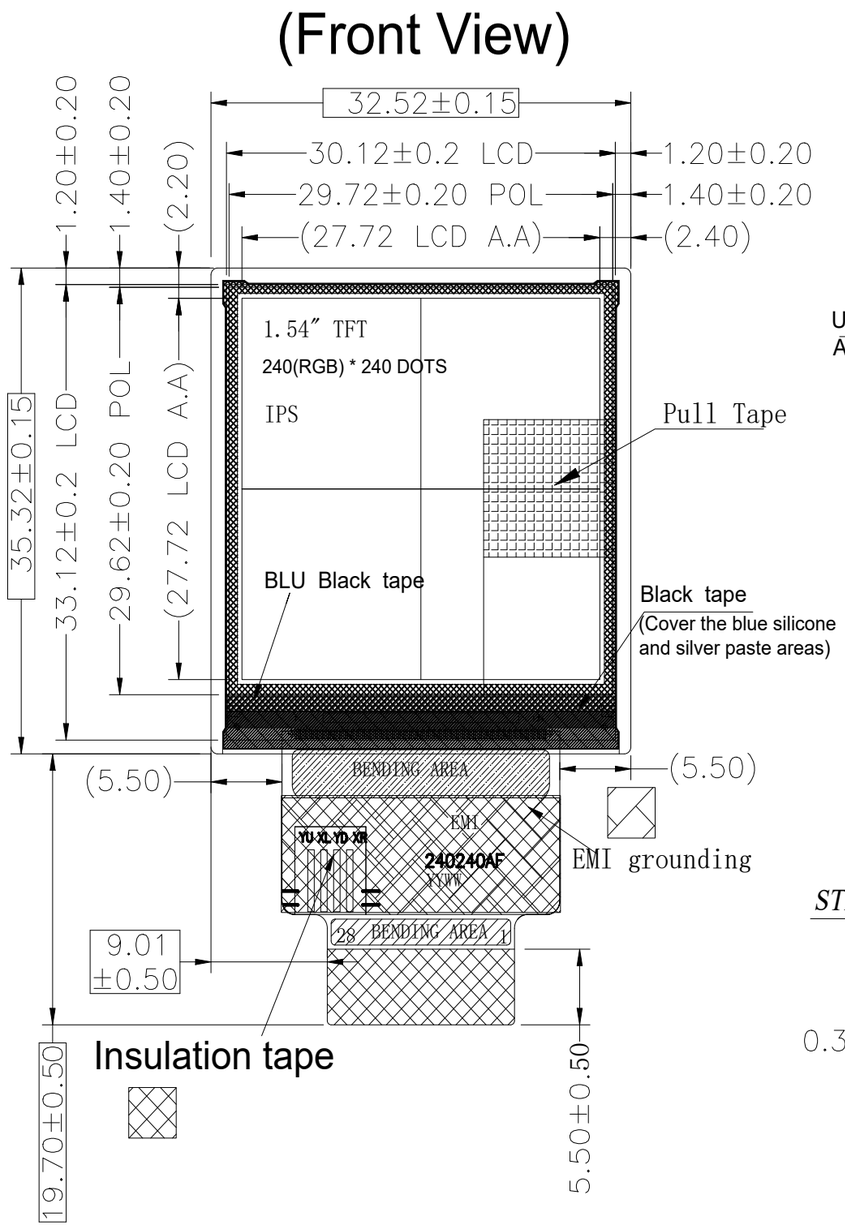

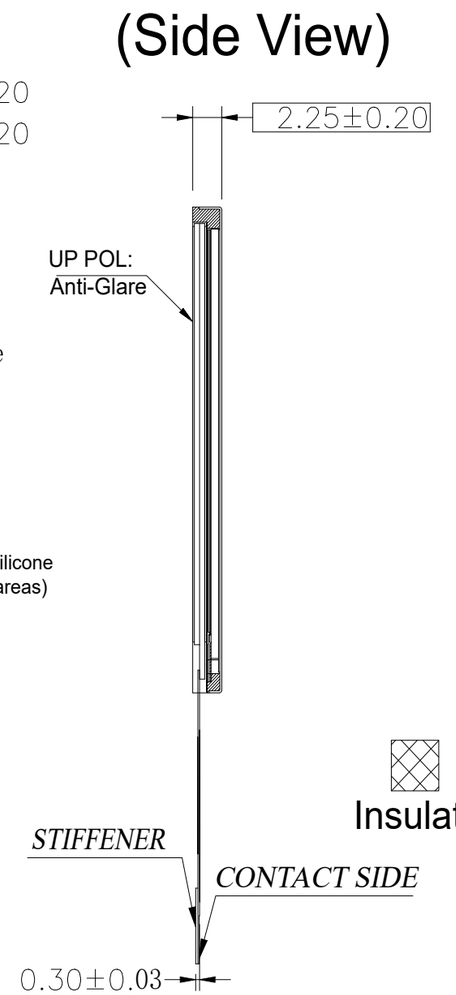

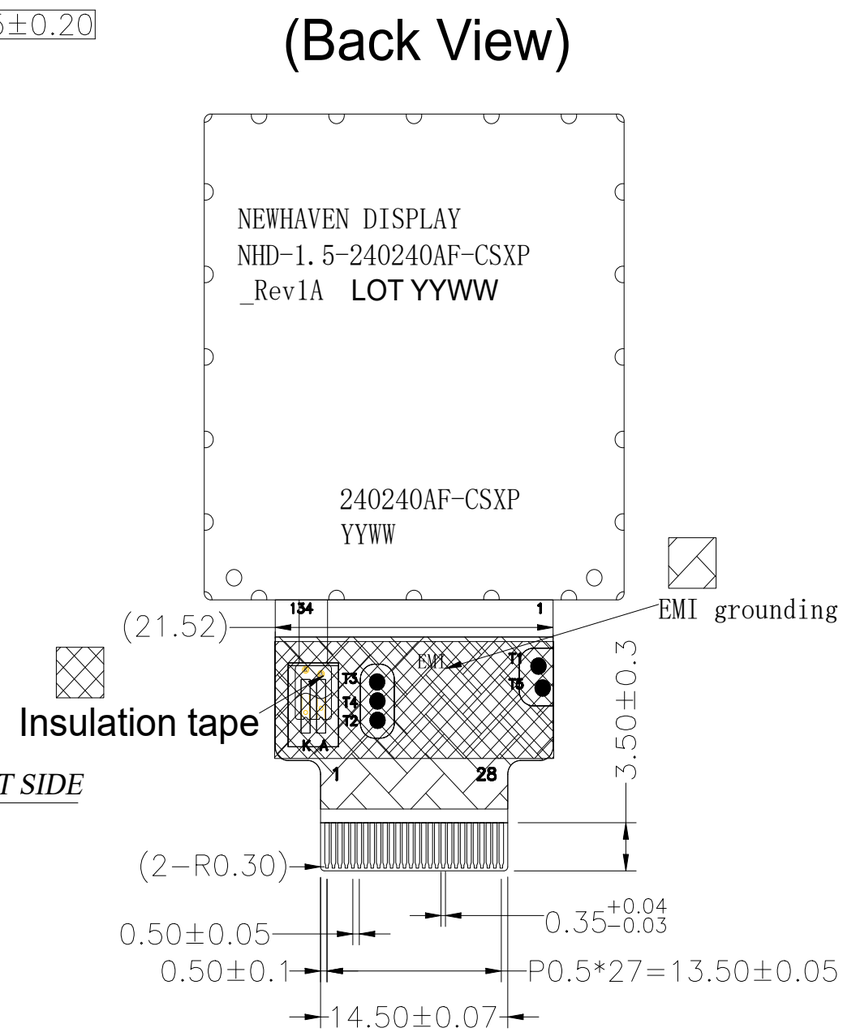

Pin No.	Symbol
1	LED_K
2	LED_A
3	NC
4	GND
5	VDD
6	IM2
7	IM1
8	IM0
9	RESX
10	CSX
11	DCX
12	WRX
13	RDX
14	SDA
15	DB0
16	DB1
17	DB2
18	DB3
19	DB4
20	DB5
21	DB6
22	DB7
23	TE
24	SDO
25	NC
26	NC
27	NC
28	NC

Product Description: 1.5” 240x240 IPS TFT

1. Driver IC: ST7789VI
2. Interface: 8-bit 8080-II Parallel, 3/4-wire SPI
3. Power Requirement: 3.3V TFT, 3.0V/100mA Backlight
4. Optical Features: Normally Black, Transmissive, Anti-Glare, 1200cd/m²
5. Recommended FFC Connector: 28pin 0.5mm pitch; Ex. Molex 5051102891
6. Built-in EMI Shielding

Standard Tolerance:
(Unless otherwise specified)
Linear: ±0.3mm

NEWHAVEN DISPLAY INTERNATIONAL

Drawing/Part Number: NHD-1.5-240240AF-CSXP		Revision: 1A
Unless otherwise specified: • Dimensions are in Millimeters • Third Angle Projection	Drawn By: K. Lewis	Approved By: K. Lewis
	Drawn Date: 05/01/2025	Approved Date: 05/01/2025

This drawing is solely the property of Newhaven Display International, Inc. The information it contains is not to be disclosed, reproduced or copied in whole or part without written approval from Newhaven Display.

Pin Description

Pin No.	Symbol	External Connection	Function Description
1	LED_K	Power Supply	Backlight Cathode
2	LED_A	Power Supply	Backlight Anode (3.0V/100mA)
3	NC	-	No Connect
4	GND	Power Supply	Ground
5	VDD	Power Supply	Supply Voltage for LCD (3.3V)
6	IM2	MPU	Interface Mode Select
7	IM1	MPU	Interface Mode Select
8	IM0	MPU	Interface Mode Select
9	RESX	MPU	Active LOW Reset signal
10	CSX	MPU	Active LOW Chip Select signal
11	DCX	MPU	**Parallel Interface:** Data / Command selection: '1' = Data; '0' = Command **3/4-wire SPI Interface:** Serial Clock signal
12	WRX	MPU	**Parallel Interface:** Active LOW Write signal **4-wire SPI Interface:** Data / Command selection: '1' = Data; '0' = Command
13	RDX	MPU	Active LOW Read signal
14	SDA	MPU	Serial Data In
15	DB0	MPU	Bi-directional data bus
16	DB1	MPU	
17	DB2	MPU	
18	DB3	MPU	
19	DB4	MPU	
20	DB5	MPU	
21	DB6	MPU	
22	DB7	MPU	
23	TE	MPU	Tearing Effect Output
24	SDO	MPU	Serial Data Out
25	NC	-	No connect
26	NC	-	No connect
27	NC	-	No connect
28	NC	-	No connect

Recommended LCD connector: 28-pin, 0.5mm pitch FFC connector **Molex P/N**: 5051102891

Interface Selection

Pin Name	8-bit 8080-II Parallel	3-wire SPI	4-wire SPI
IM0	1	1	0
IM1	0	0	1
IM2	0	1	1

Wiring Diagram

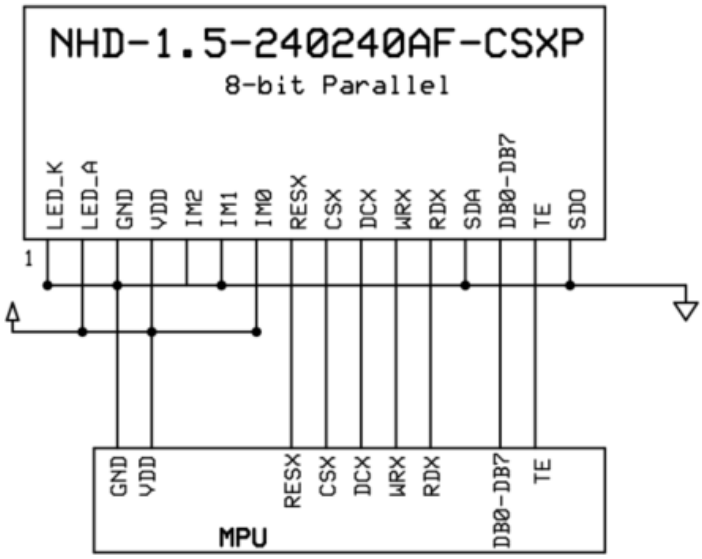

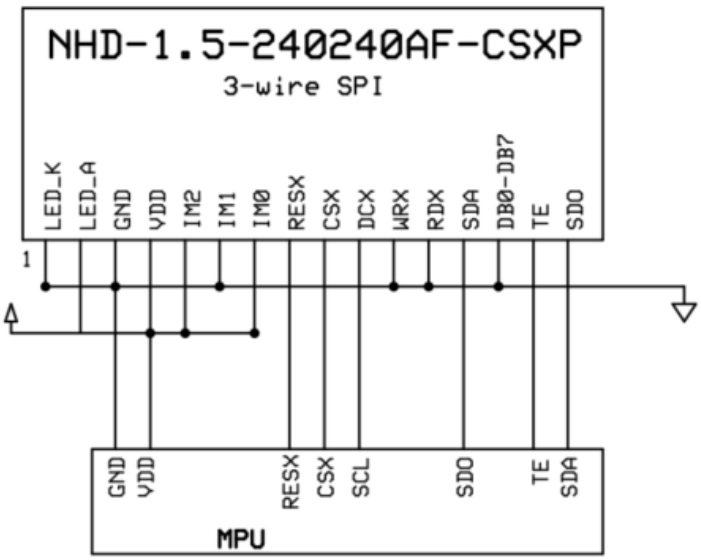

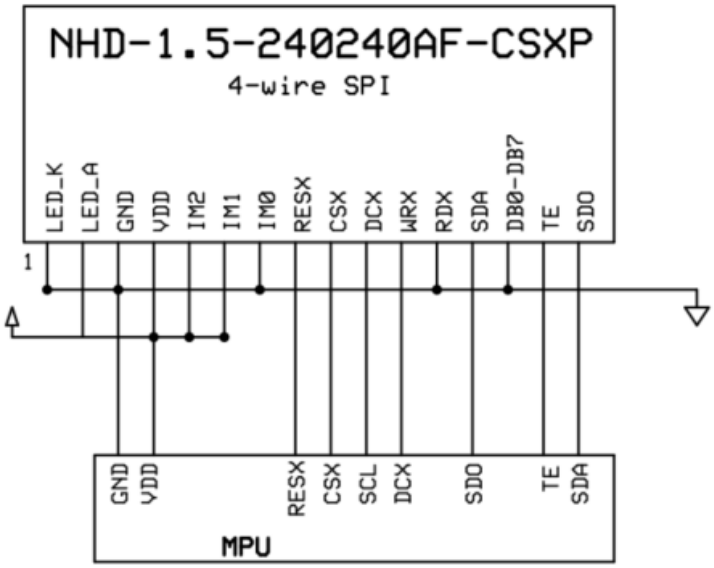

Electrical Characteristics

Item	Symbol	Condition	Min.	Typ.	Max.	Unit
Operating Temperature Range	T_{OP}	Absolute Max	-20	-	+70	°C
Storage Temperature Range	T_{ST}	Absolute Max	-30	-	+80	°C
Supply Voltage for LCD	V_{DD}	-	2.4	3.3	3.6	V
Supply Current	I_{DD}	V_{DD} = 3.3V	-	6	12	mA
"H" Level input	V_{IH}	-	0.7 * V_{DD}	-	V_{DD}	V
"L" Level input	V_{IL}	-	GND	-	0.3 * V_{DD}	V
"H" Level output	V_{OH}	-	0.8 * V_{DD}	-	V_{DD}	V
"L" Level output	V_{OL}	-	GND	-	0.2 * V_{DD}	V
Backlight Supply Current	I_{LED}	-	83	100	120	mA
Backlight Supply Voltage	V_{LED}	I_{LED} = 100mA	2.7	3.0	3.3	V
Backlight Lifetime*	-	I_{LED} = 100mA T_{OP} = 25°C	30,000	-	-	Hrs.

*Backlight Lifetime is rated as Hours until **half-brightness**, under normal operating conditions. The LED of the backlight is driven by current drain; drive voltage is for reference only. Drive voltage must be selected to ensure backlight current drain is below MAX level stated.

Optical Characteristics

Item		Symbol	Condition	Min.	Typ.	Max.	Unit
Optimal Viewing Angles	Top	ϕY+	CR ≥ 10	-	80	-	°
	Bottom	ϕY-		-	80	-	°
	Left	θX-		-	80	-	°
	Right	θX+		-	80	-	°
Contrast Ratio		CR	-	700	900	-	-
Luminance		L_V	I_{LED} = 100mA	840	1200	1800	cd/m²
Response Time		$T_R + T_F$	T_{OP} = 25°C	-	30	40	ms
Chromaticity	Red	X_R	-	0.52	0.56	0.59	-
		Y_R	-	0.30	0.33	0.36	-
	Green	X_G	-	0.32	0.35	0.38	-
		Y_G	-	0.56	0.59	0.62	-
	Blue	X_B	-	0.12	0.15	0.18	-
		Y_B	-	0.06	0.09	0.12	-
	White	X_W	-	0.255	0.285	0.315	-
		Y_W	-	0.280	0.310	0.340	-

Controller Information

Built-in ST7789VI Controller: https://support.newhavendisplay.com/hc/en-us/articles/10814990300823-ST7789VI

Timing Characteristics for TFT

Parallel 8-bit 8080-II Interface Timing Characteristics

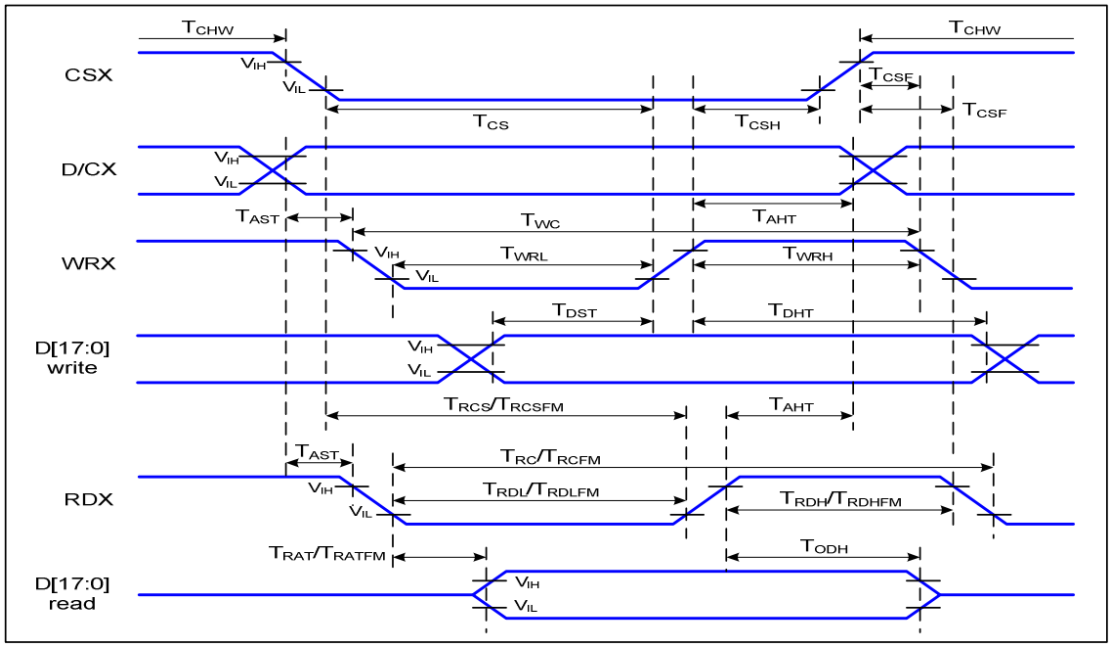

Signal	Symbol	Parameter	Min	Max	Unit	Description
D/CX	T_{AST}	Address setup time	0		ns	-
	T_{AHT}	Address hold time (Write/Read)	10		ns	
CSX	T_{CHW}	Chip select "H" pulse width	0		ns	-
	T_{CS}	Chip select setup time (Write)	15		ns	
	T_{RCS}	Chip select setup time (Read ID)	45		ns	
	T_{RCSFM}	Chip select setup time (Read FM)	355		ns	
	T_{CSF}	Chip select wait time (Write/Read)	10		ns	
	T_{CSH}	Chip select hold time	10		ns	
WRX	T_{WC}	Write cycle	66		ns	
	T_{WRH}	Control pulse "H" duration	15		ns	
	T_{WRL}	Control pulse "L" duration	15		ns	
RDX (ID)	T_{RC}	Read cycle (ID)	160		ns	When read ID data
	T_{RDH}	Control pulse "H" duration (ID)	90		ns	
	T_{RDL}	Control pulse "L" duration (ID)	45		ns	
RDX (FM)	T_{RCFM}	Read cycle (FM)	450		ns	When read from frame memory
	T_{RDHFM}	Control pulse "H" duration (FM)	90		ns	
	T_{RDLFM}	Control pulse "L" duration (FM)	355		ns	
D[17:0]	T_{DST}	Data setup time	10		ns	For CL=30pF
	T_{DHT}	Data hold time	10		ns	
	T_{RAT}	Read access time (ID)		40	ns	
	T_{RATFM}	Read access time (FM)		340	ns	
	T_{ODH}	Output disable time	20	80	ns	

3-wire Serial interface Timing Characteristics

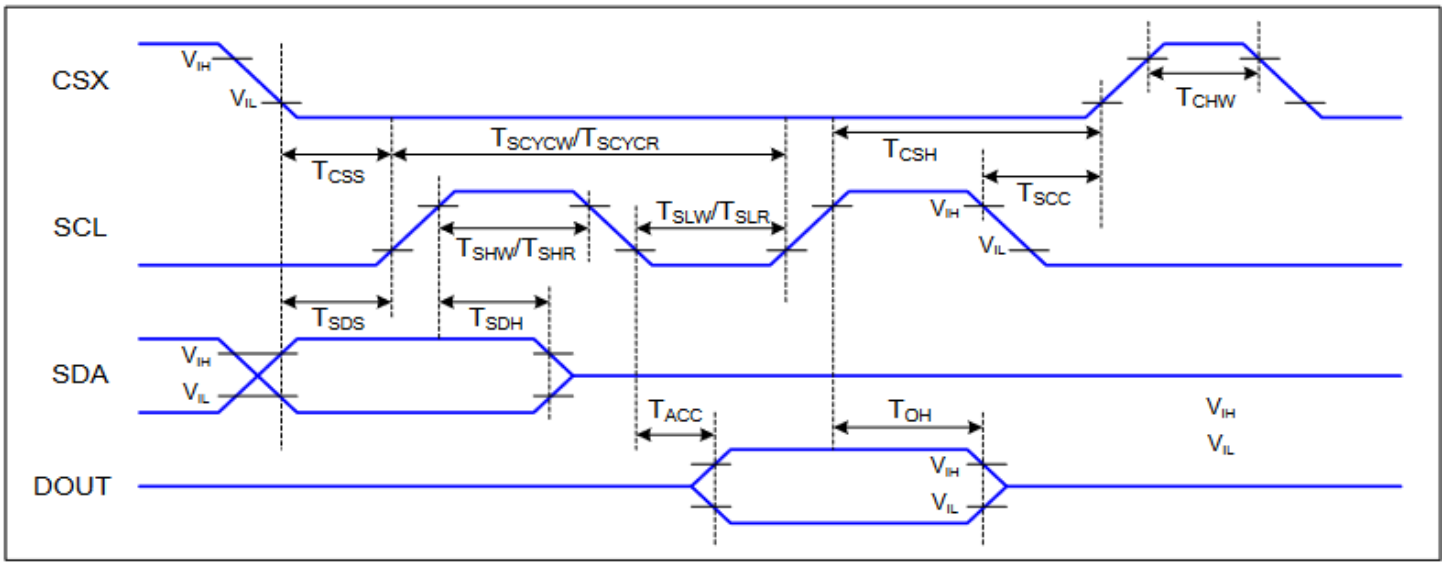

Signal	Symbol	Parameter	Min	Max	Unit	Description
CSX	T_{CSS}	Chip select setup time (write)	15		ns	
	T_{CSH}	Chip select hold time (write)	15		ns	
	T_{CSS}	Chip select setup time (read)	60		ns	
	T_{SCC}	Chip select hold time (read)	65		ns	
	T_{CHW}	Chip select "H" pulse width	40		ns	
SCL	T_{SCYCW}	Serial clock cycle (Write)	16		ns	
	T_{SHW}	SCL "H" pulse width (Write)	7		ns	
	T_{SLW}	SCL "L" pulse width (Write)	7		ns	
	T_{SCYCR}	Serial clock cycle (Read)	150		ns	
	T_{SHR}	SCL "H" pulse width (Read)	60		ns	
	T_{SLR}	SCL "L" pulse width (Read)	60		ns	
SDA (DIN)	T_{SDS}	Data setup time	7		ns	
	T_{SDH}	Data hold time	7		ns	
DOUT	T_{ACC}	Access time	10	50	ns	For maximum CL=30pF
	T_{OH}	Output disable time	15	50	ns	For minimum CL=8pF

4-wire Serial interface Timing Characteristics

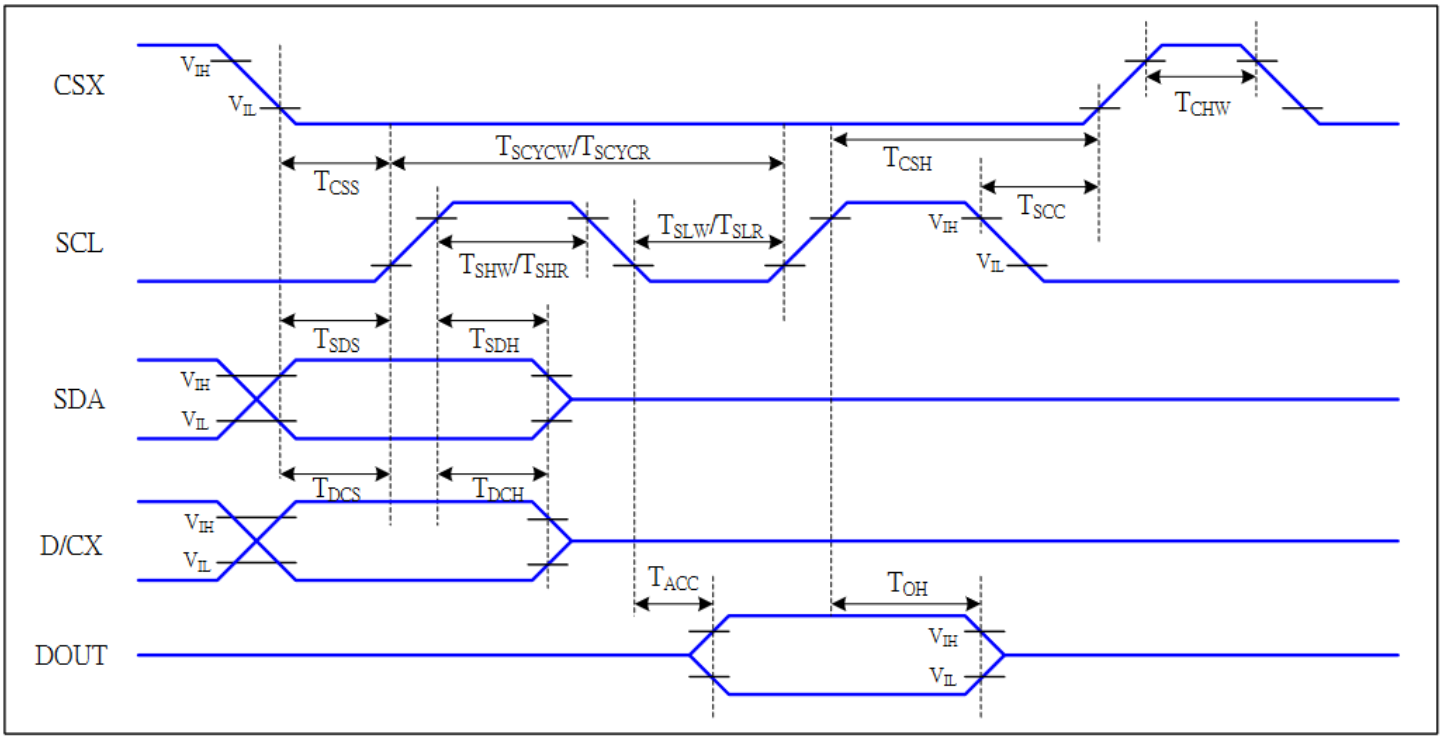

Signal	Symbol	Parameter	MIN	MAX	Unit	Description
CSX	T_{CSS}	Chip select setup time (write)	15		ns	
	T_{CSH}	Chip select hold time (write)	15		ns	
	T_{CSS}	Chip select setup time (read)	60		ns	
	T_{SCC}	Chip select hold time (read)	65		ns	
	T_{CHW}	Chip select "H" pulse width	40		ns	
SCL	T_{SCYCW}	Serial clock cycle (Write)	16		ns	-write command & data ram
	T_{SHW}	SCL "H" pulse width (Write)	7		ns	
	T_{SLW}	SCL "L" pulse width (Write)	7		ns	
	T_{SCYCR}	Serial clock cycle (Read)	150		ns	-read command & data ram
	T_{SHR}	SCL "H" pulse width (Read)	60		ns	
	T_{SLR}	SCL "L" pulse width (Read)	60		ns	
D/CX	T_{DCS}	D/CX setup time	10		ns	
	T_{DCH}	D/CX hold time	10		ns	
SDA (DIN)	T_{SDS}	Data setup time	7		ns	
	T_{SDH}	Data hold time	7		ns	
DOUT	T_{ACC}	Access time	10	50	ns	For maximum CL=30pF
	T_{OH}	Output disable time	15	50	ns	For minimum CL=8pF

Reset Timing

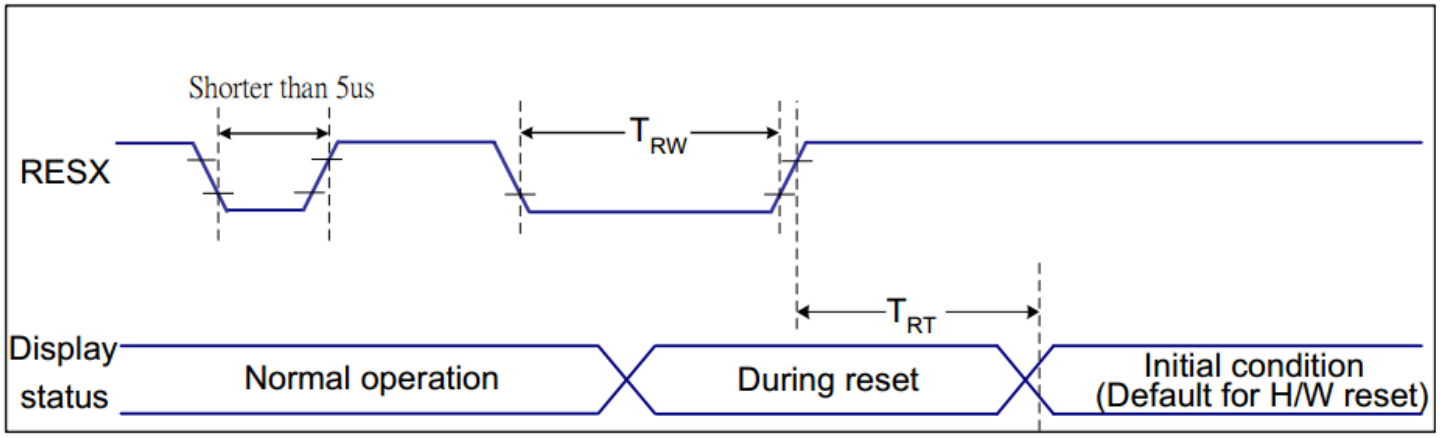

Related Pins	Symbol	Parameter	MIN	MAX	Unit
RESX	TRW	Reset pulse duration	10	-	us
	TRT	Reset cancel	-	5 (Note 1, 5)	ms
				120 (Note 1, 6, 7)	ms

Power ON/OFF Sequence

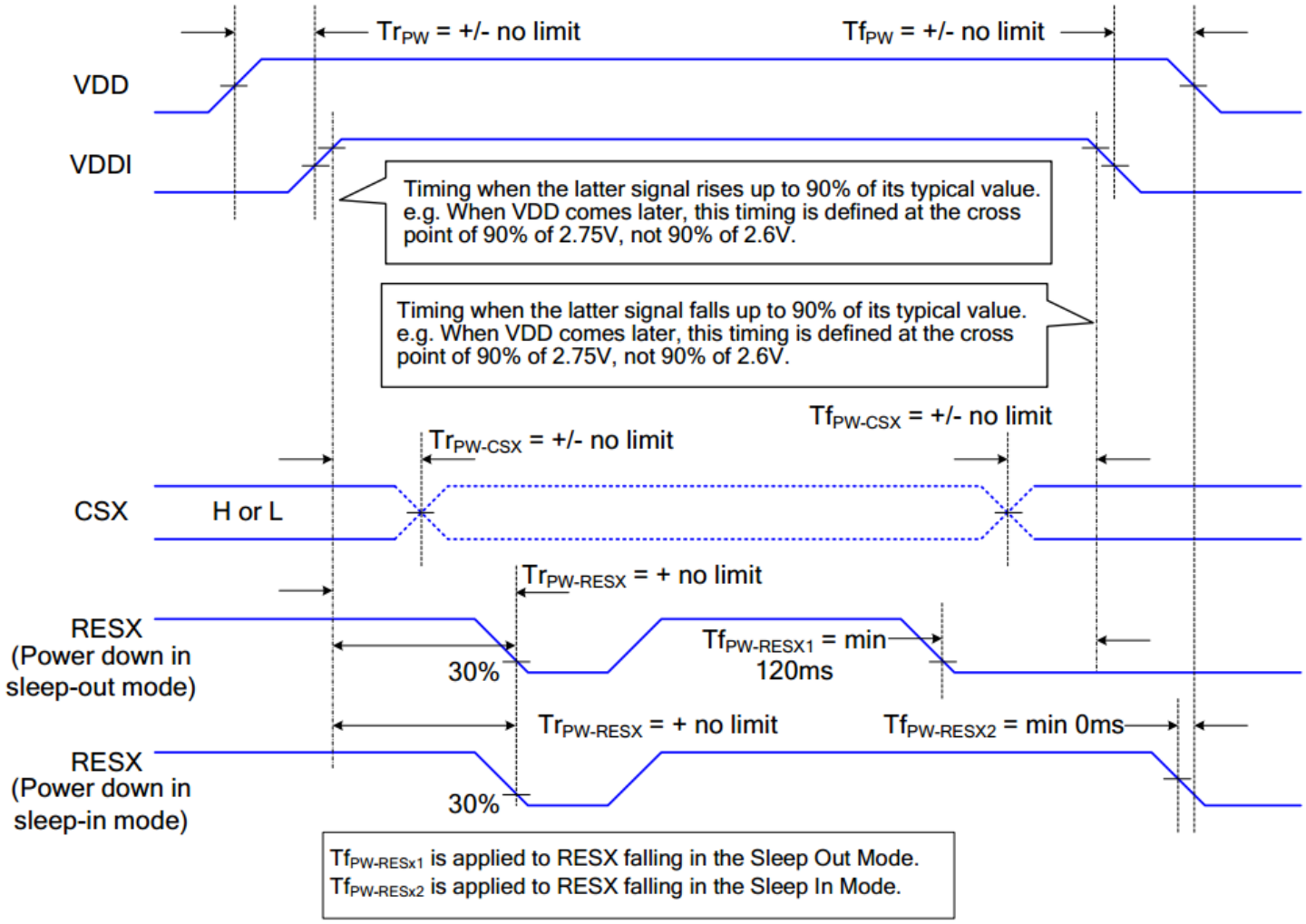

Example Initialization Code

```
/*******************************************************************************/
void Command_out(unsigned char c)  //Function used for sending commands to TFT
{
  PORTA &= ~(1 << PORTA3);   // Set DCX pin to LOW
  PORTL=c;                   // Assigning the Command Byte 'c' to PortL
  PORTA &= ~(1 << PORTA7);   // Set WRX pin to LOW
  PORTA |=  (1 << PORTA7);   // Set WRX pin to HIGH
 }

/*******************************************************************************/
void data_out(unsigned char d) //Function used for sending data to TFT
{

  PORTA |=  (1 << PORTA3);   // Set DCX pin to HIGH
  PORTL=d;                   // Assigning the Data Byte 'd' to PortL
  PORTA &= ~(1 << PORTA7);   // Set WRX pin to LOW
  PORTA |=  (1 << PORTA7);   // Set WRX pin to HIGH
}

/*******************************************************************************/
void TFT_init(){

  digitalWrite(RESX, LOW);
  delay(250);
  digitalWrite(RESX, HIGH);
  delay(250);

  Command_out(0x28);  //display off
  Command_out(0x11);  //exit SLEEP mode
  delay(100);

  Command_out(0x36);  //MADCTL: memory data access control
  data_out(0x88);

  Command_out(0x3A);  //COLMOD: Interface Pixel format  *** 65K-colors in 16bit/pixel (5-
6-5) format when using 16-bit interface to allow 1-byte per pixel
  data_out(0x55);

  Command_out(0xB2);  //PORCTRK: Porch setting
  data_out(0x0C);
  data_out(0x0C);
  data_out(0x00);
  data_out(0x33);
  data_out(0x33);

  Command_out(0xB7);  //GCTRL: Gate Control
  data_out(0x35);

  Command_out(0xBB);  //VCOMS: VCOM setting
  data_out(0x2B);

  Command_out(0xC0);  //LCMCTRL: LCM Control
  data_out(0x2C);

  Command_out(0xC2);  //VDVVRHEN: VDV and VRH Command Enable
  data_out(0x01);
  data_out(0xFF);
```

```
  Command_out(0xC3);  //VRHS: VRH Set
  data_out(0x11);

  Command_out(0xC4);  //VDVS: VDV Set
  data_out(0x20);

  Command_out(0xC6);  //FRCTRL2: Frame Rate control in normal mode
  data_out(0x0F);

  Command_out(0xD0);  //PWCTRL1: Power Control 1
  data_out(0xA4);
  data_out(0xA1);

  Command_out(0xE0);  //PVGAMCTRL: Positive Voltage Gamma control
  data_out(0xD0);
  data_out(0x00);
  data_out(0x05);
  data_out(0x0E);
  data_out(0x15);
  data_out(0x0D);
  data_out(0x37);
  data_out(0x43);
  data_out(0x47);
  data_out(0x09);
  data_out(0x15);
  data_out(0x12);
  data_out(0x16);
  data_out(0x19);

  Command_out(0xE1);  //NVGAMCTRL: Negative Voltage Gamma control
  data_out(0xD0);
  data_out(0x00);
  data_out(0x05);
  data_out(0x0D);
  data_out(0x0C);
  data_out(0x06);
  data_out(0x2D);
  data_out(0x44);
  data_out(0x40);
  data_out(0x0E);
  data_out(0x1C);
  data_out(0x18);
  data_out(0x16);
  data_out(0x19);

  Command_out(0x2A);  //X address set
  data_out(0x00);
  data_out(0x00);
  data_out(0x00);
  data_out(0xEF);

  Command_out(0x2B);  //Y address set
  data_out(0x00);
  data_out(0x00);
  data_out(0x01);
  data_out(0x3F);
  delay(10);
  Command_out(0x21);  //Color inversion for IPS
  Command_out(0x29);  //display ON
  delay(10);
}
```

Quality Information

Test Item	Content of Test	Test Condition	Note
High Temperature Storage	Endurance test applying the high storage temperature for a long time.	+80°C, 240hrs	2
Low Temperature Storage	Endurance test applying the low storage temperature for a long time.	-30°C, 240hrs	1,2
High Temperature Operation	Endurance test applying the electric stress (voltage & current) and the high thermal stress for a long time.	+70°C, 240hrs	2
Low Temperature Operation	Endurance test applying the electric stress (voltage & current) and the low thermal stress for a long time.	-20°C, 240hrs	1,2
High Temperature / Humidity Operation	Endurance test applying the electric stress (voltage & current) and the high thermal with high humidity stress for a long time.	+50°C, 90% RH, 120hrs	1,2
Thermal Shock resistance	Endurance test applying the electric stress (voltage & current) during a cycle of low and high thermal stress.	-30°C 30min -> 25°C 10min -> 80°C, 30min 10 cycles	
Vibration test	Endurance test applying vibration to simulate transportation and use.	Frequency: 250r/min 1 inch amplitude 45 min	3
Static electricity test	Endurance test applying electric static discharge.	Air charge: ±8kV 10 Times Contact charge: ±4kV 10 Times	

Note 1: No condensation to be observed.
Note 2: Conducted after 4 hours of storage at 25°C, 0%RH.
Note 3: Test performed on product itself, not inside a container.